21. November 2019

DALLMER

roof drain type 62 PVC, DN 70

Product No. **623041**
EAN: 4001636623041
Discount group: 10

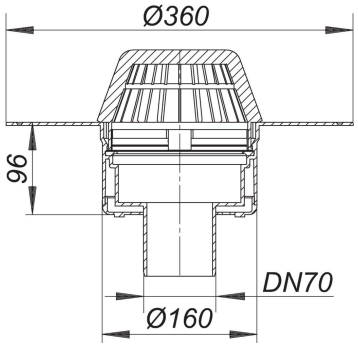

conforming to DIN EN 1253
one-piece drain, moulded in PVC, PVC membranes can be welded to the flange

specification:
- insulated drain body
- outlet vertical
- domed grate

material:
PVC

Product No.	Description	Dimensions
500328	balcony grating GES 15, 200 x 200 mm	200 x 200 mm
500311	balcony grating SEN 15, 150 x 150 mm	150 x 150 mm
500304	balcony grating SES 15, 150 x 150 mm	150 x 150 mm
620996	domed grating/gravel guard S 15, d: 170 mm	d: 170 mm
620934	domed grating/gravel guard type S 15. stainless steel, d: 150 mm	
515018	fire and sound-insulating collar - installation kit 1, DN 50/DN 70	DN 50/DN 70
515131	fire protection kit 8 for steel trapezoidal-profiled roof, DN 70	
590183	flat grate S 15, d: 170 mm	d: 170 mm
671394	overflow adaptor 86.1	
590121	perforated collar/gravel guard S 15, d: 170 mm	d: 170 mm
620958	planter drain box, 362 x 362 mm	362 x 362 mm
620965	planter raising piece, 362 x 362 mm	362 x 362 mm

Dallmer GmbH + Co KG · Wiebelsheidestraße 25 · 59757 Arnsberg / Germany · Tel.: +49 2932 9616-0 · Fax: +49 2932 9616-222
www.dallmer.de · info@dallmer.de

Subject to modifications due to technical development, errors and misprints.

21. November 2019

DALLMER

621580	raising piece type 630 clamp ring
622587	raising piece type 630 DallBit
671226	raising piece type 630 FPO-PP
623584	raising piece type 630 PVC

Dallmer GmbH + Co KG · Wiebelsheidestraße 25 · 59757 Arnsberg / Germany · Tel.: +49 2932 9616-0 · Fax: +49 2932 9616-222
www.dallmer.de · info@dallmer.de

Subject to modifications due to technical development, errors and misprints.